DAYTONA corp.

S69890①/⑥

[illegible]

*[illegible]
*[illegible]
*[illegible]

[illegible] DAMOS [illegible]	[illegible]	[illegible]
	[illegible]<CT110> JD01 93 [illegible] 08/08/31 [illegible]	69890

■[illegible]■

※[illegible]

[illegible]

警告	[illegible]
注意	[illegible]

実施	[illegible]	禁止	[illegible]
法令違反	[illegible]	高温注意	[illegible]
分解禁止	[illegible]	その他	[illegible]

警告

禁止

- **[illegible] CT110 [illegible] JD01 93 [illegible] 08/08/31 [illegible]**
  [illegible]
- **[illegible]**
  [illegible]
- **[illegible]**
  [illegible]

⚠注意

- [illegible]
  [illegible]
- [illegible]
- [illegible]
- [illegible]
  [illegible]

実施

- [illegible]
  [illegible]
- [illegible]
  [illegible]
- [illegible]100km[illegible]
  [illegible]500km[illegible]
  [illegible]
- [illegible]

法令違反

- [illegible]([illegible])[illegible]
  [illegible]

高温注意

- [illegible]
- [illegible]
  [illegible]
- [illegible]
  [illegible]
- [illegible]
  [illegible]

分解禁止

- [illegible]
  [illegible]

- [illegible]
  [illegible]
- [illegible]
  [illegible]
- [illegible]

[illegible]

[illegible]

[illegible]

[illegible]

[illegible]

その他

[illegible]
[illegible]:[illegible]40621[illegible]1,575[illegible]1,500[illegible]

[illegible]

[illegible]

[illegible]

[illegible]

[illegible]

[illegible]18291-HB2-900

[illegible]

[illegible]([illegible])[illegible]

JMCA[illegible]
[illegible]JMCA[illegible]

[illegible]

[illegible]

[illegible]

□□□□□□

- □□□□□ □□□□□□□□□ □ □□□□□□□□□ □□□□□□ □□□□□□□□□□□□□□□□□ □□□□□□□□□□□□□
- □□□□□□□□□□□□□□□□□□□□□□□□□□□
- □□ 11 □□□□□□□□□ 13 □□□
- □□□□□□□□□□□□□□□□ 81□□□□□□3,750□□□

□□□□

NO	□□□□	□□□(mm)	□□	NO	□□□□	□□□(mm)	□□
①	□□□□□□ASSY		1	⑥	□□□□□□□□	M8X15XP1.25	1
②	□□□□□□□□□		1	⑦	□□□□□□	M8	1
③	□□□□□□□□□		1	⑧	□□□□□□□□	M6XP1.0	3
④	□□□□□□		1	⑨	□□□□□		2
⑤	□□□□	M8XP1.25X50L	1				

□□□□□□□□□

□□□

1. □□□□□□□□□□□□□□
2. □□□□□□□□□□□□□R□□□□□□□□□□□□□□□□□□□□□1□□□□□□□□
3. □□□□□□□□□□□□□□□□□□□□□□□□□□□□□□□□□□□□□1□□□□□□□□
4. □□□□□□□□□□□□□□□□□□□□□□□□□□2□□□□□□□□□□
5. 1.2.□□□□□□□□□□□□□□□□□□2□□□□□□□□□□□□□□□□□ASSY□□□□□□□□
6. □□□□□□□□□□□□□□□□□□□□□□□□

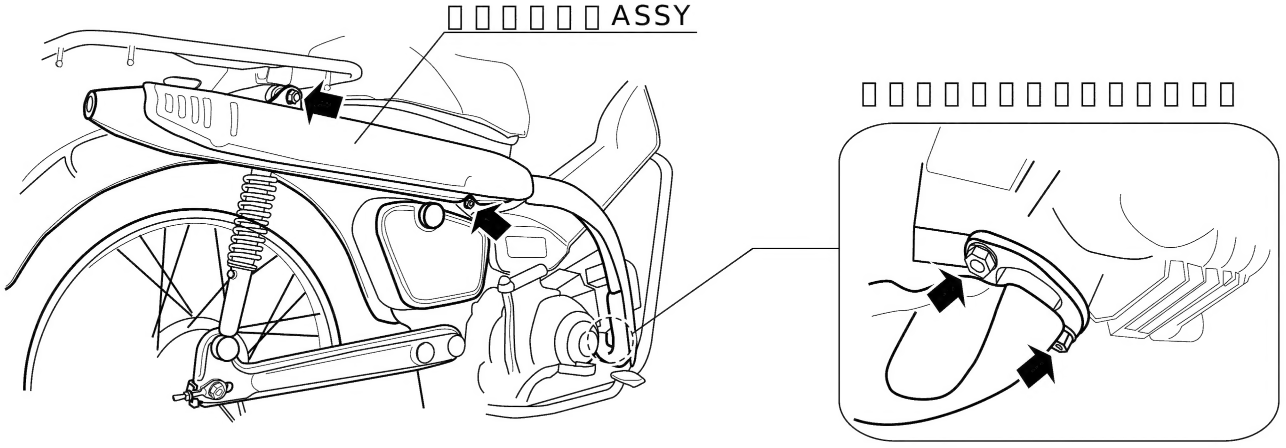

□□□□

1. ⑤□□□□□□R□□□□□□□□□□□□□□□□□□□□□□□
2. □□□□□□□□□□□□□□□□□□□□□□□□□□□□□□□□

   □□□□□□□□□□□□□ □□□□□□□□□18291-HB2-900

⚠注意

□□□□□□□□□□□□□□□□□□□□□□□□□□□□□□

3. ②□□□□□□□□□□□□□□□□□□□□□□□□□□□□□□□□□□□□□□□
4. ⑧□□□□□□□□□3□□□□□□□②□□□□□□□□□□□□□□□□□□□
5. ④□□□□□□□③□□□□□□□□□□□□□□□①□□□□□□ASSY□□□□□□□□□□□
6. ①□□□□□□ASSY□□□□□□②□□□□□□□□□□□□□□□□□
7. ④□□□□□□□□□□□□□□R□□□□□□□□□□□□□⑤□□□□□□□□□□□□⑥□□□□□□□□□⑦□
   □□□□□□□□□□□⑤□□□□□□□□□□□
8. ⑨□□□□□□2□□□□□□□□□□
9. □□□□□□□□□□□□□□□□□□□□□□□□□□□□□□□□□□□③□□□□□□□□□2□□②□□□□
   □□□□□□□□□□□□□③□□□□□□□□□③□□□□□□□□□□□⑥□□□□□□□□□□□□□□□□□
   □□□□□□□□
10. ①□□□□□□/②□□□□□□□□□□□□□□□□□□□□□□□□□□□□□□

⚠注意

□□

11. □□□□□□□□□□□□□□□□□□□□□□□

⑧□□□□□□□□□□□□□□□□□□□□12□□m□1.2kgf□m□

⑧□□□□□□□□□□□□□□□□□□□□□12□□m□1.2kgf□m□

⑤□□□□□□□□□□□30□□□□3.0kgf□m□

⑥□□□□□□□□□□□□□□□20□□□□2.0kgf□m□

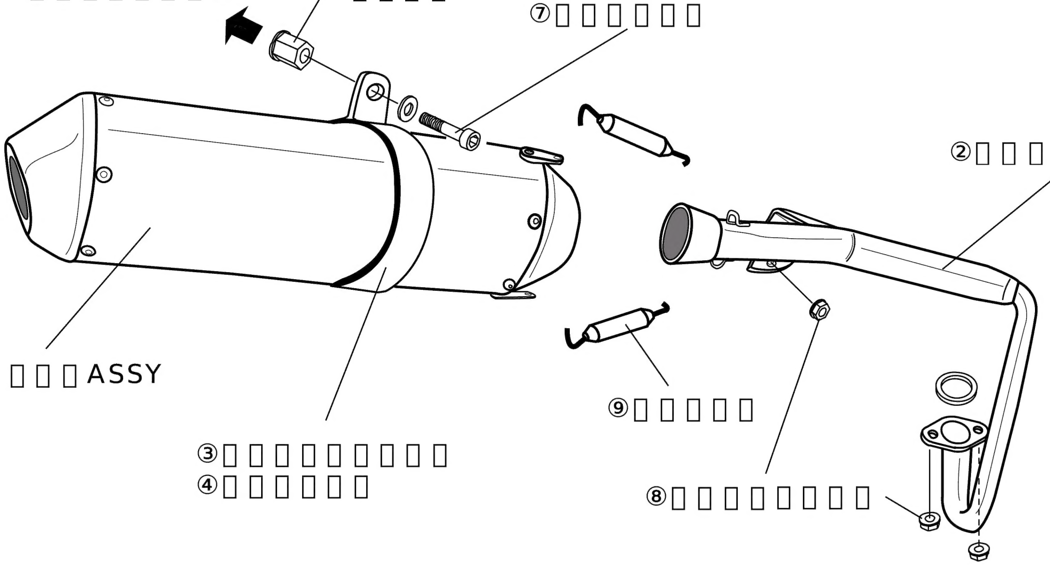

[illegible]

[illegible]	[illegible]	[illegible]	[illegible]
[illegible]	66317	[illegible]2,940	[illegible]
[illegible]	66319	[illegible]1,050	[illegible]
[illegible] SET	70292	[illegible]1,260	⑤[illegible]⑥[illegible]⑦[illegible] SET[illegible]
[illegible] SET	70410	[illegible]1,050	[illegible] 2[illegible]

株式会社デイトナ [illegible]437-0226 [illegible] 4805
URL: http://www.daytona-mc.jp E-mail: info@daytona.co.jp
◎[illegible]0120-60-4955[illegible]